RoHS COMPLIANT 2002/95/EC

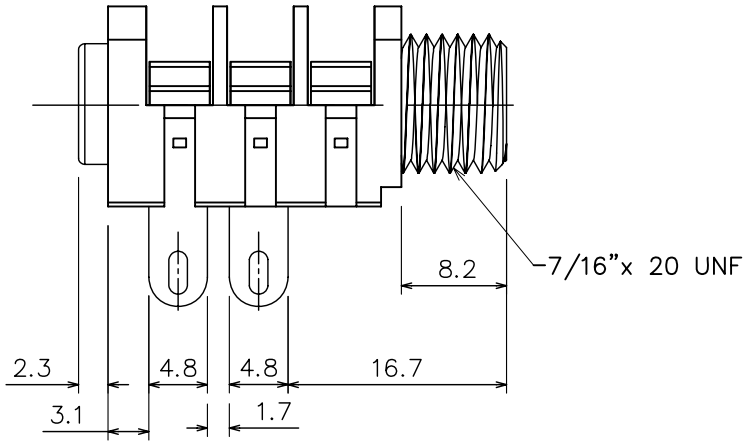

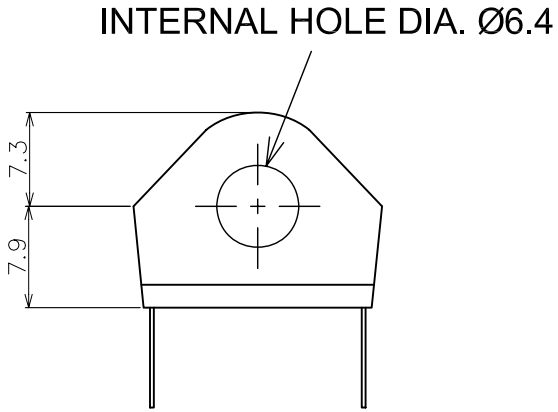

MATERIAL PROPERTIES

Parts	Description	Material	Remark
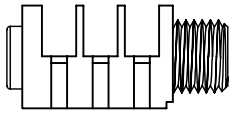	Jack Body	Polyamide	White
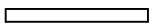	FIBRE WASHER (1.6mm Th.)	Vulcanized Fibre	Black
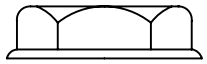	Plastic Nut	Polyamide	White
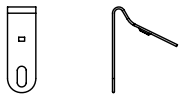	Metal Contact	Nickel Silver	Tin Plated

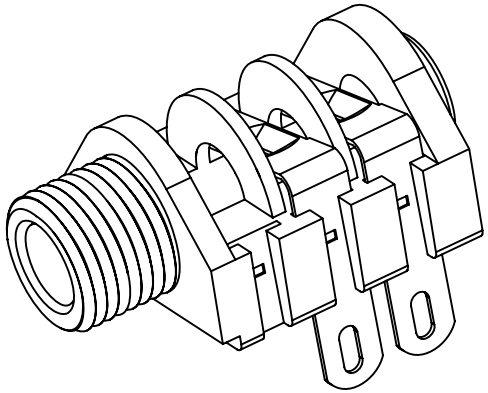

ISOMETRIC VIEW

DIMENSIONS IN MILLIMETERS
3rd ANGLE PROJECTION
SCALE: N.T.S

SUPPLY NUTS AND WASHERS AS LOOSE PARTS.

ISSUE	AMEND	DATE
1	1st DRAWN	26/08/14

DRAWN PYQ

CHECKED PCS

MATERIAL: AS TABLE

FINISH: AS MOULDED

TOLERANCES
NO DECIMAL PLACE ± 1.0
1 DECIMAL PLACE ± 0.5
2 DECIMAL PLACES ± 0.1
DIAMETER HOLES ± 0.1
ANGLES ± 1/2 DEGREE
(UNLESS OTHERWISE STATED)

CHK

TITLE: 6.35 PHONE JACK, SOLDER TAG/NSB

DRWG NO: JT-218W