Color Variants

Colour	Code	Material
Blue	E	Polyamide
Green	N	Polyamide
Red	R	Polyamide
Translucent	L	Polyamide
Transparent	P	PVC
White	W	Polyamide
Yellow	Y	Polyamide
Grey	G	Polyamide
Orange	O	Polyamide
Purple	U	Polyamide

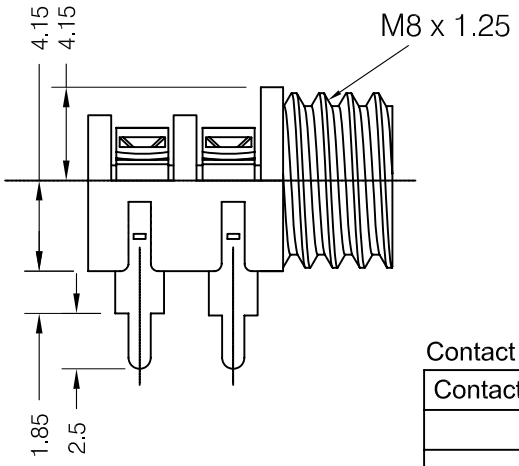

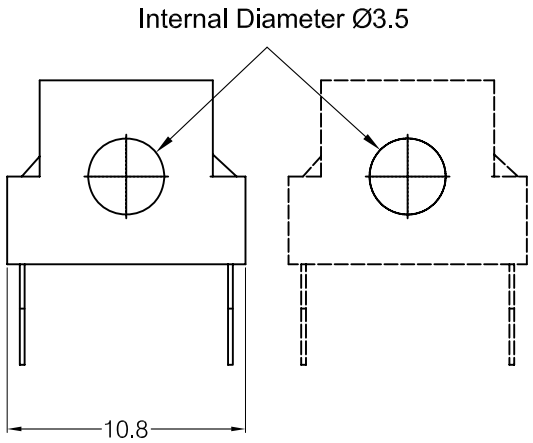

Contact Type Variants

Contact Type Sub No
SB
BB
MB
MM

MATERIAL PROPERTIES

Parts	Description	Material	Remark
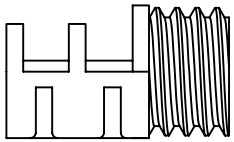	Jack Body	Synthetic Resin	See Color Variants Table
	Metal Contact	Phosphorus Bronze	Tin Plated
	Metal Nut	Steel Alloy	Nickel Plated

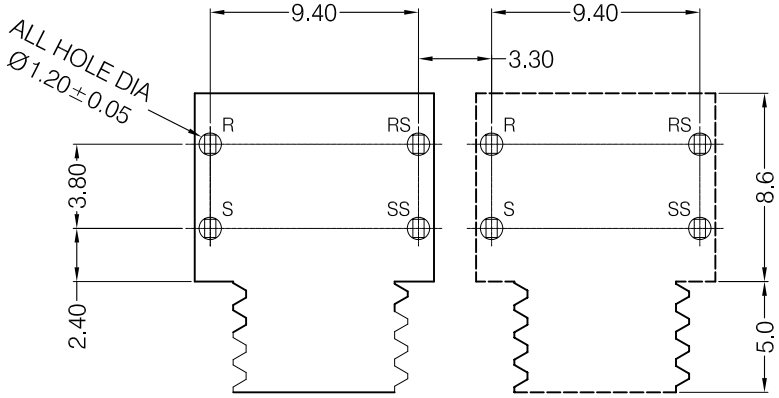

PCB LAYOUT

DIMENSIONS IN MILLIMETERS
3rd ANGLE PROJECTION
SCALE: N.T.S

Metal Nuts Supplied As Loose Parts

ISSUE	AMEND	DATE
3	COLORS ADDED	24/04/15
2	New Colors Added	03/07/15
1	1st DRAWN	24/04/15

DRAWN PYQ

CHECKED PCS

MATERIAL: SEE TABLE

FINISH: AS MOULDED/SEE TABLE

TOLERANCES
NO DECIMAL PLACE ± 1.0
1 DECIMAL PLACE ± 0.50
2 DECIMAL PLACES ± 0.10
DIAMETER HOLES ± 0.10
ANGLES ± 1/2 DEGREE
(UNLESS OTHERWISE STATED)

CHK

TITLE: 3.5mm JACK SOCKET, PC

DRWG NO: JC-6250